HANGER STYLE	AXLE SPACING	DIM A	BUMP OUT
STRADDLE MOUNT FAB	42.5/49.0	5.87	12826-01
	44.0/50.0/51.0	7.00	
	53.5/54.5 OLD STYLE	9.00	
UNDER MOUNT FAB	42.5/49.0	5.75	10521-00
	44.0/50.0/51.0	6.87	
	53.5/54.5 OLD STYLE	9.00	
ST MT CAST	42.5/49.0	5.87	12826-01
	44.0/50.0/51.0	6.87	
UN MT CAST	42.5/49.0	5.87	10521-00
	44.0/50.0/51.0	6.87	

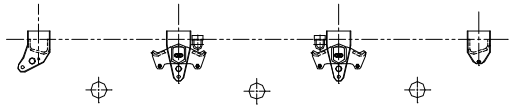

TRI AXLE

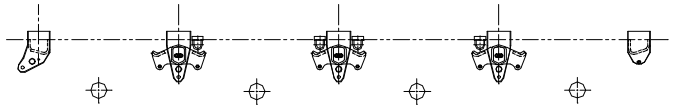

FOUR OR MORE AXLE

BUMP OUT LOCATIONS FOR MULTI-AXLE UNITS

SCALE: 1/16

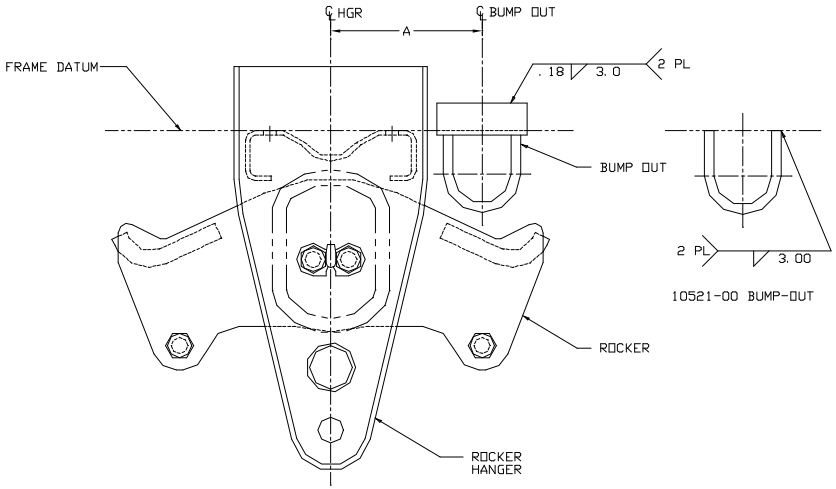

12826-01 BUMP OUT SHOWN WITH 7701-01 HANGER AND 750 ROCKER

CAD DRAWING - DO NOT REVISE MANUALLY.

2000363	B	REVISED CHART: REMOVED ROCKER AND ROCKER HANGER DRAWING. ADDED AXLE SPACING.	11/00	CJP	SNM	RSB
8932	A	REVISED DIM "A" FROM WAS 6.75, 6.87 WAS 6.62. ADDED WELD FOR 10521.	10/89	DCG	DCC	CDT
ER NO.	SYM	REVISIONS	DATE	BY	CHK	APPD

DRAWN: SNM	DATE: 06/06/88	HUTCHENS INDUSTRIES INC. SPRINGFIELD, MISSOURI
CHECKED: DCC	DATE: 07/18/88	
APPROVED: RSB	DATE: 07/25/88	TITLE: INSTALLATION DRAWING BUMP-OUTS - MULTI-AXLE 42.5 THROUGH 54.5 AC
MFG. APPL: CB	DATE: 08-30-88	
ER: 8820	DATE: 07/25/88	
NEXT ASSY:	PROJECT OR FOR REFERENCE NO: RLE4712-B PROJH88-312	
TOLERANCES UNLESS OTHERWISE SPECIFIED: DECIMAL: .XX ± .03 .XXX ± .010 ANGULAR ± 1°	SCALE: HALF	SHEET 1 OF 1
REMOVE ALL BURRS AND SHARP CORNERS		SIZE: B DRAWING NO.: 12820 REV. B

DRAWING NO. 12820 REV. B 1 OF 1